PROBLEM SET 8

1. Find the simplest possible logic expressions for a 2421-to-51111 BCD code converter.

The don't cares in case of 2421 code are: 0101, 0110, 0111, 1000, 1001, 1010, i.e. Σ d (5, 6, 7, 8, 9, 10)
51111 output code word is written as
$f_4 = \Sigma m(11, 12, 13, 14, 15) + d(5, 6, 7, 8, 9, 10)$
$f_3 = \Sigma m(4, 12, 13, 14, 15) + d(5, 6, 7, 8, 9, 10)$
$f_2 = \Sigma m(3, 4, 13, 14, 15) + d(5, 6, 7, 8, 9, 10)$
$f_1 = \Sigma m(2, 3, 4, 14, 15) + d(5, 6, 7, 8, 9, 10)$
$f_0 = \Sigma m(1, 2, 3, 4, 15) + d(5, 6, 7, 8, 9, 10)$

The K-maps for f_4, f_3, f_2, f_1 and f_0, their minimization and the minimal expressions obtained from them are shown below.

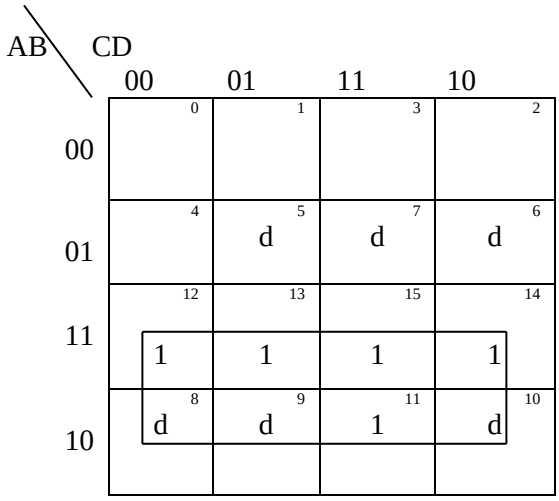

$f_4 = A$

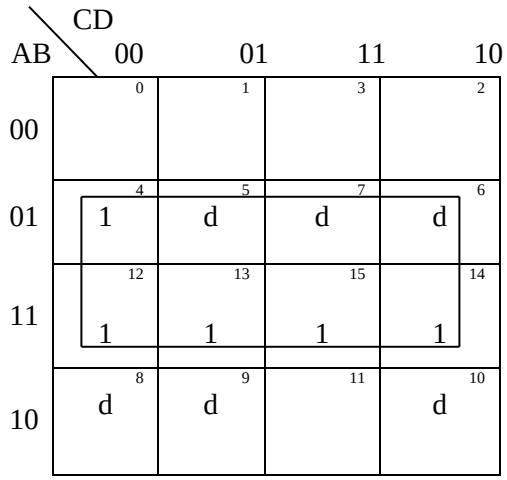

$f_3 = B$

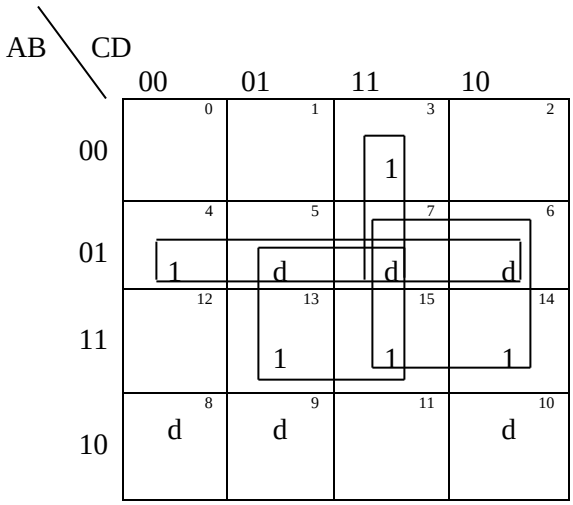

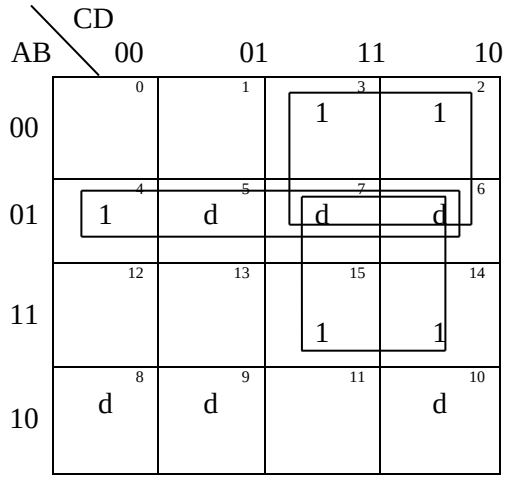

$f_2 = \overline{A}B + BD + BC + \overline{A}CD$

$f_1 = BC + \overline{A}B + \overline{A}C$

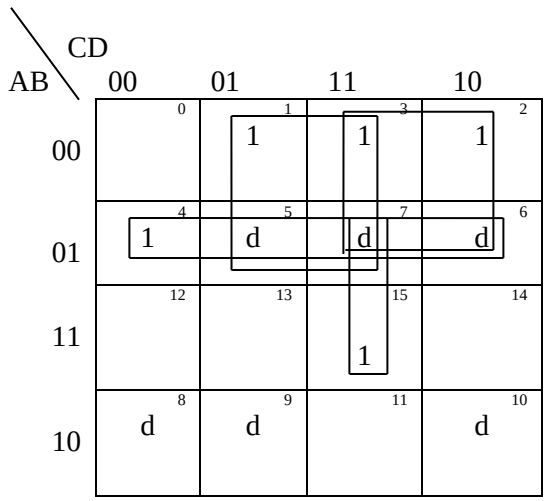

$f_0 = BCD + \overline{A}B + \overline{A}D + \overline{A}C$

So the simplest possible logic expressions for a 2421-to-51111 BCD code convertor are
$f_4 = A$, $f_3 = B$, $f_2 = \overline{A}B + BD + BC + \overline{A}CD$, $f_1 = BC + \overline{A}C + \overline{A}B$, $f_0 = BCD + \overline{A}B + \overline{A}C + \overline{A}D$
A logic diagram can be drawn based on these expressions.

2. Draw a logic circuit that generates an odd parity bit for the 3321 BCD code.

Solution: The table below shows the odd parity bit generation for the 3321 BCD code. Let ABCD be the 3321 BCD code word and f_0 is the odd parity bit generated.

3321 BCD code	Odd parity bit
A B C D	f
0 0 0 0	1
0 0 0 1	0
0 0 1 0	0
0 0 1 1	1
0 1 0 1	1
1 0 1 0	1
1 1 0 0	1
1 1 0 1	0
1 1 1 0	0
1 1 1 1	1

From the above table, we get the expression for odd parity bit f_0 as

$f_0 = \Sigma\, m(0,3,5,10,12,15) + d(4,6,7,8,9,11)$

The K-map for f_0, its minimization and the minimal expression for f_0 obtained from it are shown below.

AB \ CD	00	01	11	10
00	1 (0)	(1)	1 (3)	(2)
01	d (4)	1 (5)	d (7)	d (6)
11	1 (12)	(13)	1 (15)	(14)
10	d (8)	d (9)	d (11)	1 (10)

$f_0 = A\overline{B} + \overline{A}B + \overline{C}\,\overline{D} + CD = (A \oplus B) + (C \odot D)$

The design equation for odd parity bit generator is $f_0 = (A \oplus B) + (C \odot D)$

Based on the above expression for f_0, a logic circuit that generates an odd parity bit for the 3321 BCD code can be drawn.

3. Design the following code converters: (a) 5211 to 2421, (b) 4-bit binary to Excess-3 and (c) 4-bit BCD to Gray.

Solution:

(a) The 5211 code to 2421 code conversion table is shown below. Let ABCD be the 5211 code word and $f_3\, f_2\, f_1\, f_0$ be the 2421 code word.

5 2 1 1 Code	2 4 2 1 Code
$f_3\ f_2\ f_1\ f_0$	A B C D
0 0 0 0	0 0 0 0
0 0 0 1	0 0 0 1
0 0 1 1	0 0 1 0
0 1 0 1	0 0 1 1
0 1 1 1	0 1 0 0

1 0 0 0	1 0 1 1
1 0 1 0	1 1 0 0
1 1 0 0	1 1 0 1
1 1 1 0	1 1 1 0
1 1 1 1	1 1 1 1

The 5211 code requires 4 bits. 4 bits can have 16 possible combinations. So there are 6 invalid words.
From the above table we can see that the don't cares are $\Sigma\, d(2,4,6,9,11,13)$
From the above table we can obtain the expressions for f_3 ,f_2 ,f_1 and f_0 as

$f_3 = \Sigma\, m\,(8,10,12,14,15) + d(2,4,6,9,11,13)$
$f_2 = \Sigma m\,(7,10,12,14,15) + d\,(2,4,6,9,11,13)$
$f_1 = \Sigma m\,(3,5,8,14,15) + d(2,4,6,9,11,13)$
$f_0 = \Sigma m\,(1,5,8,12,15) + d(2,4,6,9,11,13)$

The K-maps for f_3, f_2, f_1, f_0, their minimization and the minimal expressions obtained from them are shown below.

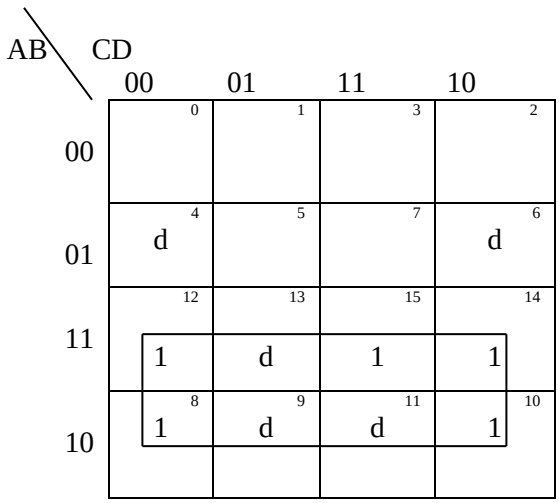

$f_3 = A$

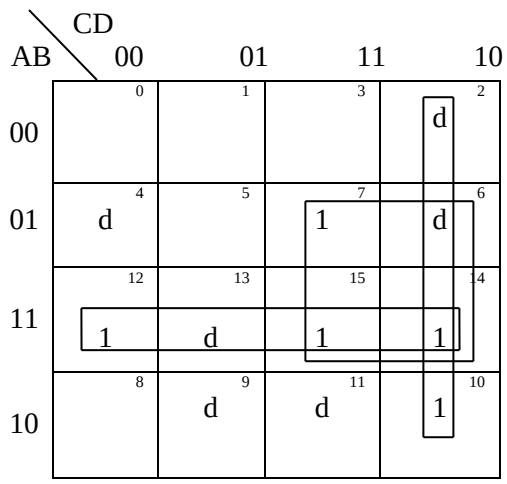

$f_2 = C\overline{D} + AB + BC$

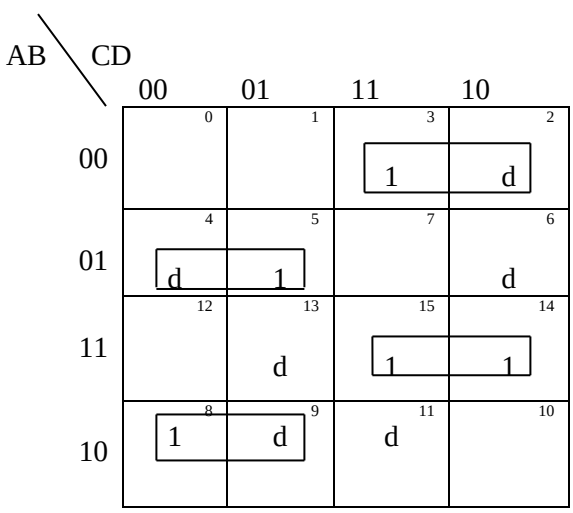

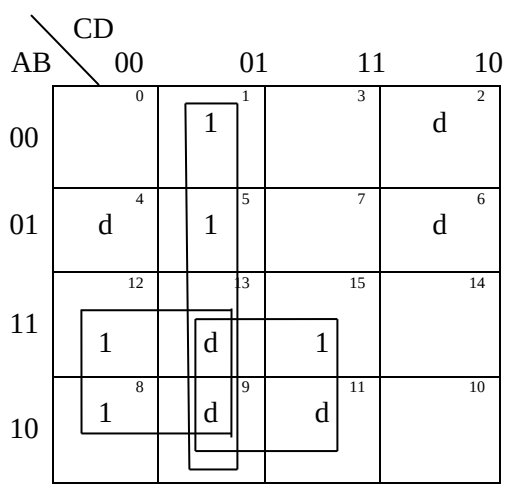

$$f_1 = A\overline{B}\,\overline{C} + \overline{A}\,B\overline{C} + ABC + \overline{A}\,\overline{B}\,C = \overline{C}(A \oplus B) + C\left(A \odot B\right) = (A \oplus B \oplus C) \quad f_0 = \overline{C}\,D + A\overline{C} + AD$$

Based on the above expressions for f_{3min}, $f_{2\,min}$, f_{1min} and f_{0min} a logic circuit can be drawn for a 5211 to 2421 code converter.

(b) The input is a 4-bit binary. It has 16 possible combinations and all are valid. So there are no don't cares. The output is in XS-3. It has 8 bits but the MSB is '0'. The 4-bit binary to XS-3 code conversion is shown below. ABCD is the 4-bit binary and $f_7\, f_6\, f_5\, f_4\, f_3\, f_2\, f_1\, f_0$ be the XS-3 word.

4 bit binary	XS-3	
A B C D	$f_7\, f_6\, f_5\, f_4$	$f_3\, f_2\, f_1\, f_0$
0 0 0 0	0 0 1 1	0 0 1 1
0 0 0 1	0 0 1 1	0 1 0 0
0 0 1 0	0 0 1 1	0 1 0 1
0 0 1 1	0 0 1 1	0 1 1 0
0 1 0 0	0 0 1 1	0 1 1 1
0 1 0 1	0 0 1 1	1 0 0 0
0 1 1 0	0 0 1 1	1 0 0 1
0 1 1 1	0 0 1 1	1 0 1 0
1 0 0 0	0 0 1 1	1 0 1 1
1 0 0 1	0 0 1 1	1 1 0 0
1 0 1 0	0 1 0 0	0 0 1 1
1 0 1 1	0 1 0 0	0 1 0 0
1 1 0 0	0 1 0 0	0 1 0 1
1 1 0 1	0 1 0 0	0 1 1 0
1 1 1 0	0 1 0 0	0 1 1 1
1 1 1 1	0 1 0 0	1 0 0 0

The K-maps for f_6, f_5, f_4, f_3, f_2, f_1 and f_0, their minimization and the minimal expressions obtained from them are shown below.

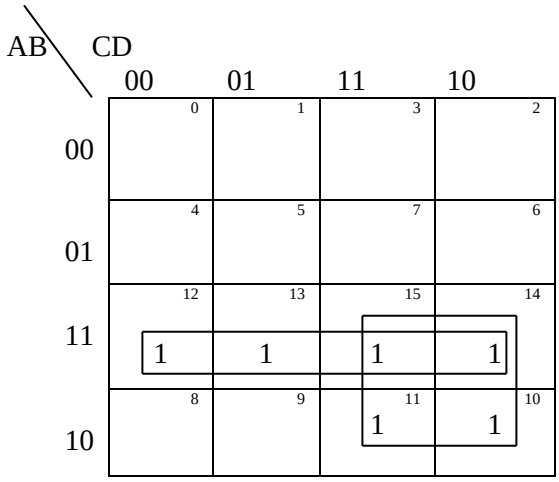

$f_6 = AB + AC$

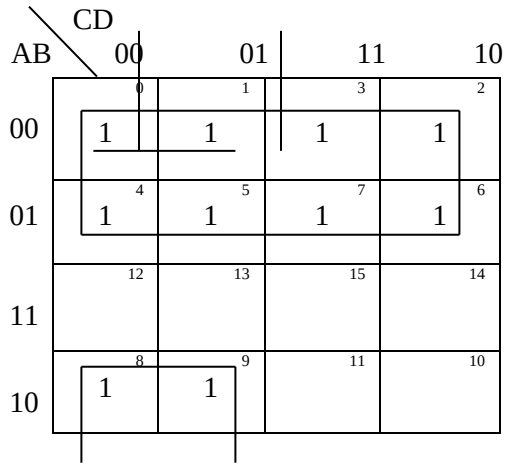

$f_5 = \overline{A} + \overline{B}\,\overline{C} = f_4$

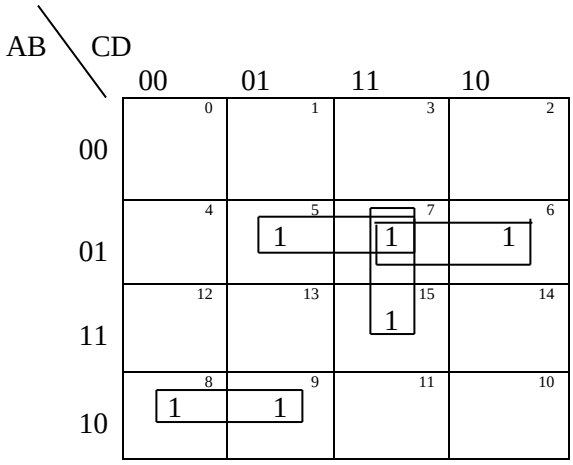

$f_3 = A\overline{B}\,\overline{C} + \overline{A}\,BD + \overline{A}\,BC + BCD$

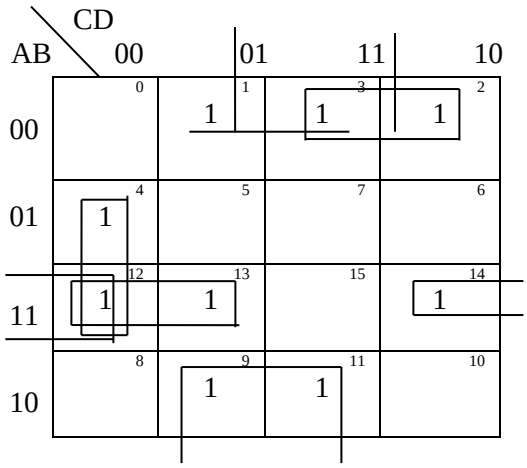

$f_2 = \overline{B}\,D + B\,\overline{C}\,\overline{D} + AB\overline{D} + \overline{A}\,\overline{B}\,C + AB\,\overline{C}$

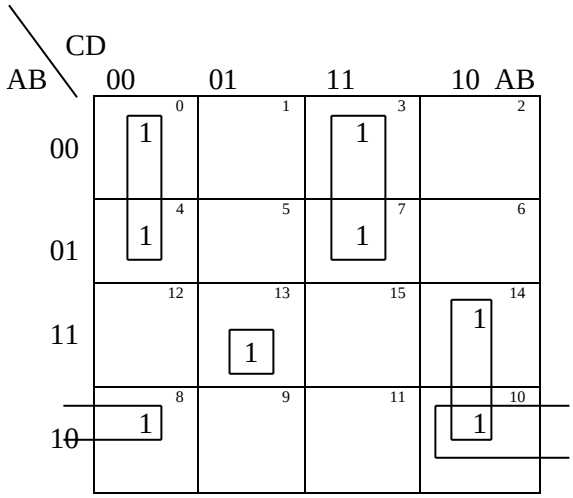

$f_1 = \overline{A}\,CD + AC\overline{D} + \overline{A}\,\overline{C}\,\overline{D} + A\overline{B}\,\overline{D} + AB\overline{C}\,D$

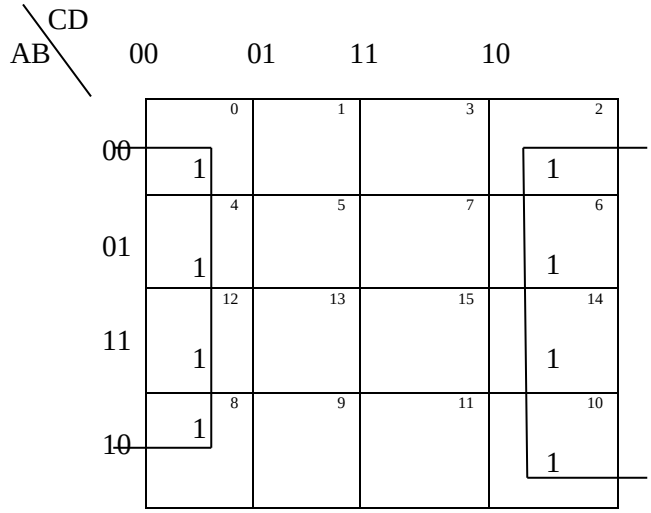

$f_0 = \overline{D}$

The design equations for a 4-bit binary to XS-3 code converter are

$f_6 = AB + AC$

$f_3 = A\overline{B}\,\overline{C} + \overline{A}\,BD + \overline{A}\,BC + BCD$

$f_1 = \overline{A}\,CD + AC\overline{D} + \overline{A}\,\overline{C}\,\overline{D} + A\overline{B}\,\overline{D} + AB\overline{C}\,D$

$f_5 = \overline{A} + \overline{B}\,\overline{C} = f_4$

$f_2 = \overline{B}\,D + B\,\overline{C}\,\overline{D} + AB\overline{D} + \overline{A}\,\overline{B}\,C + AB\,\overline{C}$

$f_0 = \overline{D}$

Based on the above minimal expressions for f_6, f_5, f_4, f_3, f_2, f_1 and f_0 the logic circuit for a 4-bit binary to XS-3 code convertor can be drawn

(c) The 4-bit BCD to Gray code conversion table is shown below. The 4-bit BCD has 6 don't cares. They are Σd (10, 11, 12, 13, 14, 15). ABCD is the 4-bit BCD word and G_3 G_2 G_1 G_0 be the corresponding Gray code.

4-bit BCD	Gray
A B C D	G_3 G_2 G_1 G_0
0 0 0 0	0 0 0 0
0 0 0 1	0 0 0 1
0 0 1 0	0 0 1 1
0 0 1 1	0 0 1 0
0 1 0 0	0 1 1 0
0 1 0 1	0 1 1 1
0 1 1 0	0 1 0 1
0 1 1 1	0 1 0 0
1 0 0 0	1 1 0 0
1 0 0 1	1 1 0 1

From the above table we get the expressions for G_3, G_2, G_1, G_0 as

$G_3 = \sum m(8,9) + d(10,11,12,13,14,15)$; $G_2 = \sum m(4,5,6,7,8,9) + d(10,11,12,13,14,15)$

$G_1 = \sum m(2,3,4,5) + d(10,11,12,13,14,15)$; $G_0 = \sum m(1,2,5,6,9) + d(10,11,12,13,14,15)$

The K-maps for G_3, G_2, G_1 and G_0, their minimization and the minimal expressions obtained from them are shown below.

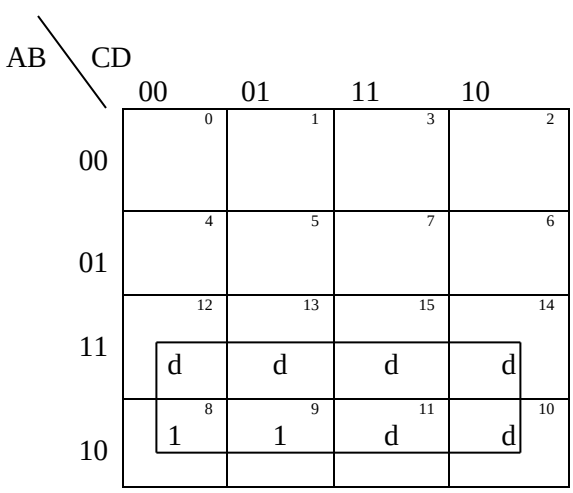

$G_3 = A$

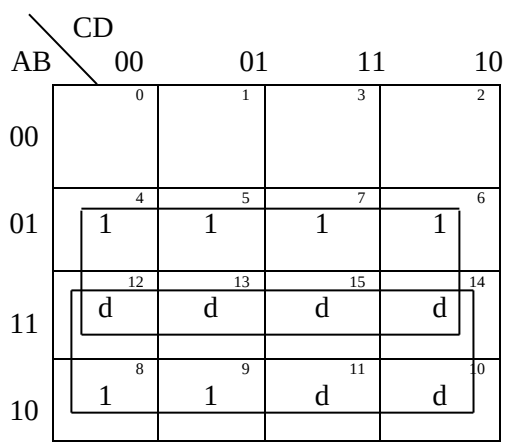

$G_2 = A + B$

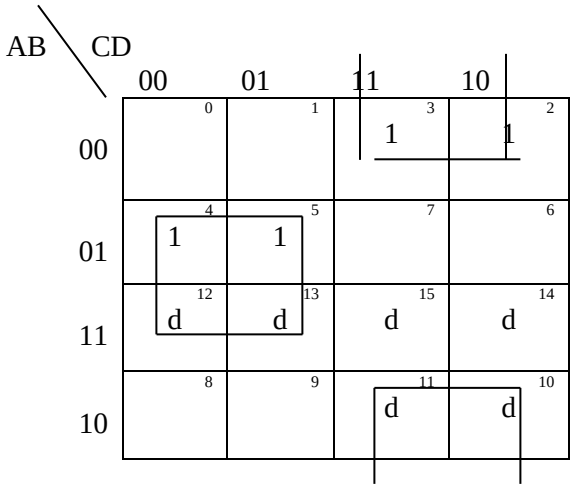

$G_1 = B\overline{C} + \overline{B}C = B \oplus C$

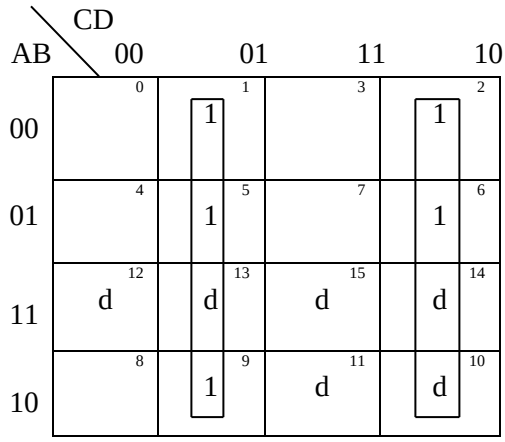

$G_0 = \overline{C}D + C\overline{D} = C \oplus D$

So the minimal expressions for a 4-bit BCD to Gray code converter are
$G_3 = A$; $G_2 = A + B$; $G_1 = B \oplus C$; $G_0 = C \oplus D$;

Based on the above minimal expressions for G_3, G_2, G_1 and G_0 a logic diagram can be drawn for a 4-bit BCD to Gray code converter.

4. Design a logic circuit to generate an even parity bit

Solution:
The truth table for generation of even parity bit and odd parity bit for a 3-bit binary input is shown below. Let ABC be the 3-bit binary and f_e be the even parity bit and f_o be the odd parity bit.

3-bit binary	Even parity	Odd parity
A B C	f_e	f_o
0 0 0	0	1
0 0 1	1	0
0 1 0	1	0
0 1 1	0	1
1 0 0	1	0
1 0 1	0	1

1 1 0	0	1
1 1 1	1	0

From the above table we observe that the expressions for even parity bit f_e and odd parity bit f_o are
$f_e = \sum m(1, 2, 4, 7)$ and $f_o = \sum m(0, 3, 5, 6)$
f_o is the complement of f_e.
The K-map for f_e, its minimization and the minimal expression obtained from it are shown below.

A \ BC	00	01	11	10
0	0	1 (1)	3	1 (2)
1	1 (4)	5	1 (7)	6

$f_e = \overline{A}\,\overline{B}\,C + \overline{A}\,B\,\overline{C} + A\overline{B}\,\overline{C} + ABC = \overline{A}(B \oplus C) + A(\overline{B \oplus C}) = A \oplus B \oplus C$

$f_0 = \overline{A \oplus B \oplus C}$

5. Realize the logic expression given below using a
(i) 8:1 MUX (ii) 16:1 MUX
F = $\boldsymbol{\Sigma}$ m(0, 1, 3, 5, 8, 11, 12, 14, 15)

Solution: Given $F = \sum m\,(0, 1, 3, 5, 8, 11, 12, 14, 15)$
The truth table for F and the logic diagrams to implement the function F using an 8: 1MU X and a 16:1 MUX are shown in figure below.

(a) Truth table

Truth table for F

S_3 S_2 S_1 S_0					
A	B	C	D	F	
0	0	0	0	1	F = 1
0	0	0	1	1	
0	0	1	0	0	F = D
0	0	1	1	1	
0	1	0	0	0	F = D
0	1	0	1	1	
0	1	1	0	0	F = 0
0	1	1	1	0	
1	0	0	0	1	F = $\overline{D}$
1	0	0	1	0	
1	0	1	0	0	F = D
1	0	1	1	1	
1	1	0	0	1	F = $\overline{D}$

1	1	0	1	0	
1	1	1	0	1	F = 1
1	1	1	1	1	

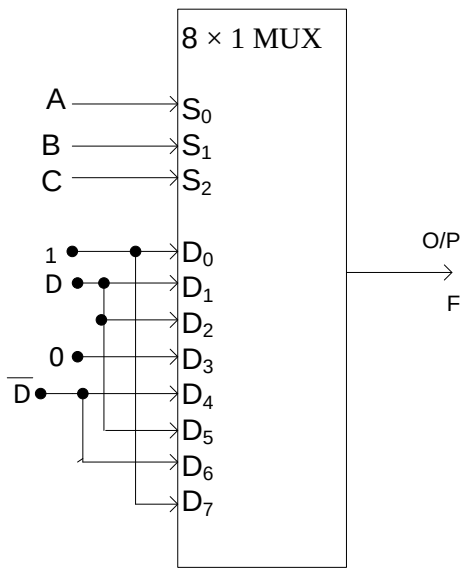

(b) Logic diagram

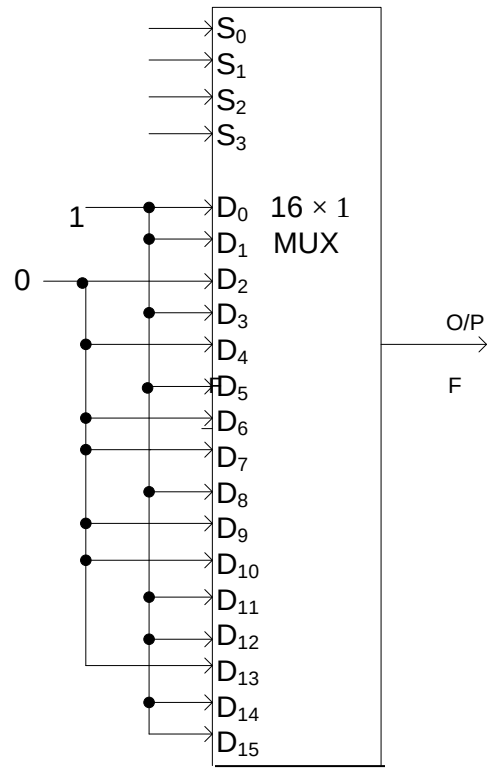

(c) Logic diagram

While using an 8:1 MUX, looking at the truth table we observe that F is same for each the two occurrences of ABC = 000 and ABC = 111 and F= 1 in both the cases. So connect a 1 to D_0 and D_7. Also since F is same for each of two occurrences of ABC = 011 connect a '0' to D_3. Since F is different for each of two occurrences of ABC = 001, ABC = 010, and ABC = 101 and since F = D in these cases connect D to D_1,D_2 and D_5. Also since F is different for each of two occurrences of ABC = 100, and ABC = 110, and since F= $\overline{D}$ in these cases connect $\overline{D}$ to D_4 and D_5 as shown in figure.

6. Implement the function F(a, b, c, d) = a$\overline{b}$ + acd + b$\overline{c}$ + d using a MUX with 3 select inputs.

Solution: $F(a,b,c,d) = a\overline{b} + acd + b\overline{c} + d = 10XX + 1X11 + X10X + XXX1$

$= 1000 + 1001 + 1010 + 1011 + 1011 + 1111 + 0100 + 0101 + 1100 + 1101$
$+0001 + 0011 + 0101 + 0111 + 1001 + 1011 + 1101 + 1111$

$= \Sigma\, m(8, 9, 10, 11, 11, 15, 4, 5, 12, 13, 1, 3, 5, 7, 9, 11, 13, 15)$

$= \Sigma m(1, 3, 4, 5, 7, 8, 9, 10, 11, 12, 13, 15)$

Given F = $\Sigma\, m\ (1, 3, 4, 5, 7, 8, 9, 10, 11, 12, 13, 15)$

The truth table for F and the logic diagram to implement F using a MUX with 3 select inputs is shown below.

S_3 a	S_2 b	S_1 c	S_0 d	F	
0	0	0	0	0	F = d
0	0	0	1	1	
0	0	1	0	0	F = d
0	0	1	1	1	
0	1	0	0	1	F = 1
0	1	0	1	1	
0	1	1	0	0	F = d
0	1	1	1	1	
1	0	0	0	1	F = 1
1	0	0	1	1	
1	0	1	0	1	F = 1
1	0	1	1	1	
1	1	0	0	1	F =1
1	1	0	1	1	
1	1	1	0	0	F = d
1	1	1	1	1	

(a) Truth table

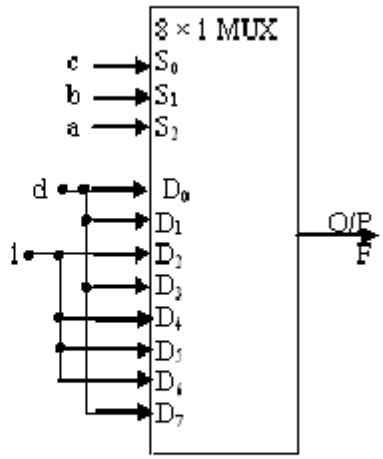

(b) Logic diagram

From the truth table we observe that

1. For both values of abc = 000, abc = 001, abc = 011 and abc = 111, F=d. So d is connected to D_0, D_1, D_3 and D_7.
2. For both values of abc = 010, abc = 100, abc = 101 and abc = 110, F = 1. So D_2, D_4, D_5 and D_6 are connected to 1.

7. Implement the following multiple output combinational logic circuit using a 4-line to 16-line decoder.

Solution: Given

$F_1 = \Sigma\, m(0, 1, 4, 7, 12, 14, 15)$

$F_2 = \Sigma m(1, 3, 6, 9, 12)$

$F_3 = \Sigma\, m\ (2, 3, 7, 8, 10)$

$F_4 = \Sigma\, m\ (1, 3, 5)$

The logic diagram to implement the given functions F_1, F_2, F_3 and F_4 using a 4-line to 16-line decoder is shown in figure below.

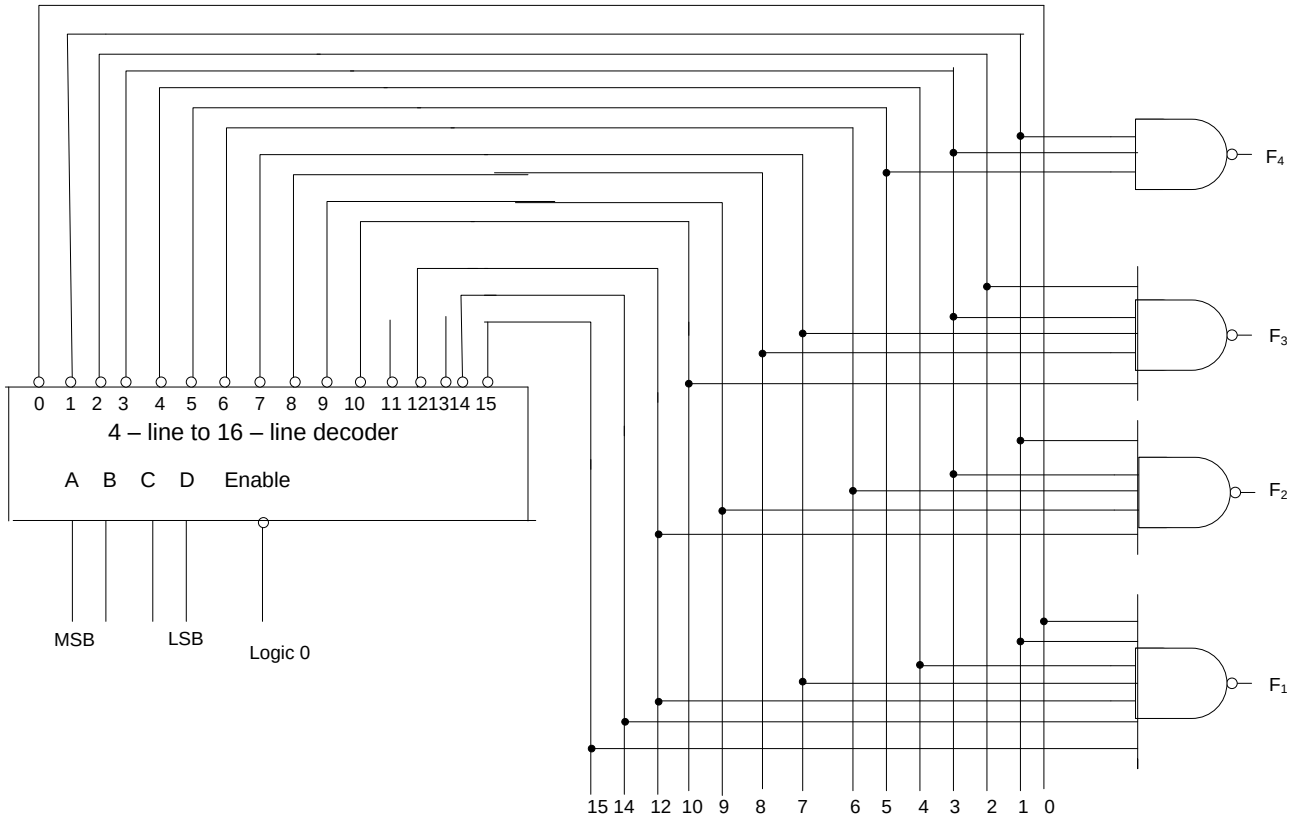

8. Each of the eight full-adders in an 8-bit parallel ripple carry adder exhibits the following propagation delay:
A to S and C_{out}: 20 ns
B to S and C_{out}: 20 ns
C_{in} to S : 30 ns
C_{in} to C_{out}: 25 ns
Determine the maximum total time for the addition of two 8-bit numbers.

$$t_{p(tot)} = 40 \text{ ns} + 6(25 \text{ ns}) + 35 \text{ ns} = \mathbf{225 \text{ ns}}$$

9. Show the additional logic circuitry necessary to make the 4-bit look-ahead carry adder into a 5-bit adder.

Full-adder 5:

$$C_{in5} = C_{out}4$$

$$C_{out5} = C_{g5} + C_{p5}C_{g4} + C_{p5}C_{p4}C_{g3} + C_{p5}C_{p4}C_{p3}C_{g2} + C_{p5}C_{p4}C_{p3}C_{g2}C_{g1} + C_{p5}C_{p4}C_{p3}C_{p2}C_{p1}C_{in1}$$

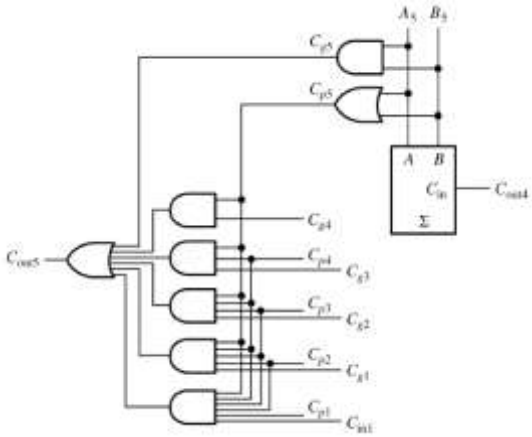

10. You wish to detect only the presence of the codes 1010, 1100, 0001, and 1011. An active- HIGH output is required to indicate their presence. Develop the minimum decoding logic with a single output that will indicate when any one of these codes is on the inputs. For any other code, the output must be LOW.

$$X = \overline{A_3}\,\overline{A_2}\,\overline{A_1}\,A_0 + A_3\,\overline{A_2}\,A_1\,\overline{A_0} + A_3 A_2\,\overline{A_1}\,\overline{A_0} + A_3\,\overline{A_2}\,A_1 A_0$$

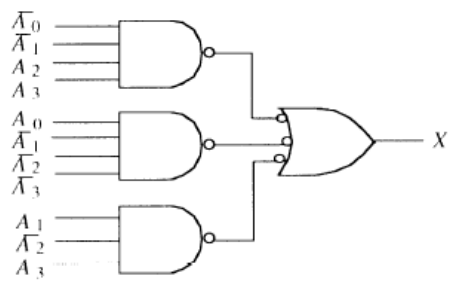

Additional Problems:

11. Design an voting system for a class of strength 64 that counts yes/no opinion and display the total number of Yes/No.